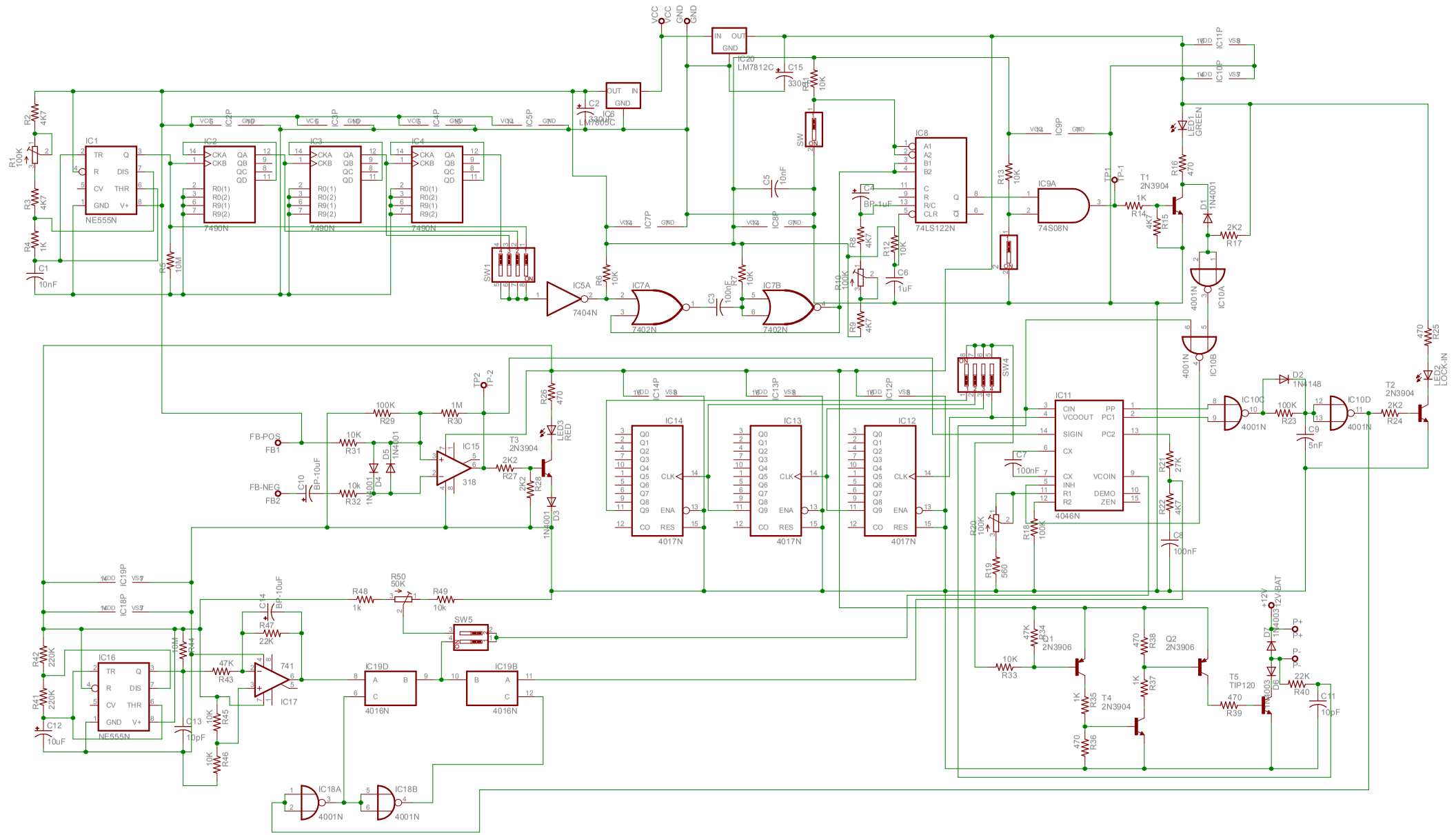

IC1
NE555N
IC2
7490N
IC3
7490N
IC4
7490N
IC5A
7404N
IC7A
7402N
IC7B
7402N
IC8
74LS122N
IC9A
74S08N
IC10A
4001N
IC10B
4001N
IC10C
4001N
IC10D
4001N
IC11
4046N
IC12
4017N
IC13
4017N
IC14
4017N
IC15
318
IC16
NE555N
IC17
741
IC18A
4001N
IC18B
4001N
IC19B
4016N
IC19D
4016N
IC20
LM7812C
IC6
LM7805C
T1
2N3904
T2
2N3904
T3
2N3904
T4
2N3904
T5
TIP120
Q1
2N3906
Q2
2N3906
D1
1N4001
D2
1N4148
D3
1N4001
D4
1N4001
D5
1N4001
D6
1N4003
D7
1N4003
LED1
GREEN
LED2
LOCK-IN
LED3
RED
SW1
SW4
SW5
FB-POS
FB1
FB-NEG
FB2
TP1
TP2
12V-BAT
P+
P-
VCC
GND